WE RESERVE ALL RIGHTS IN THIS DOCUMENT AND IN THE INFORMATION CONTAINED THERIN. REPRODUCTION, USE OR DISCLOSURE TO THIRD PARTIES WITHOUT EXPRESS AUTHORITY IS STRICTLY FORBIDDEN

© vetropack 2000

FUER DIESES DOKUMENT UND DEN DARIN DARGESTELLTEN GEGENSTAND BEHALTEN WIR UNS ALLE RECHTE VOR. VERVIELFALTIGUNGEN, BEKANNTGABE AN DRITTE ODER VER-WENDUNG SEINES INHALTS SIND OHNE UNSERE AUSDRUECKLICHE ZUSTIMMUNG VERBOTEN

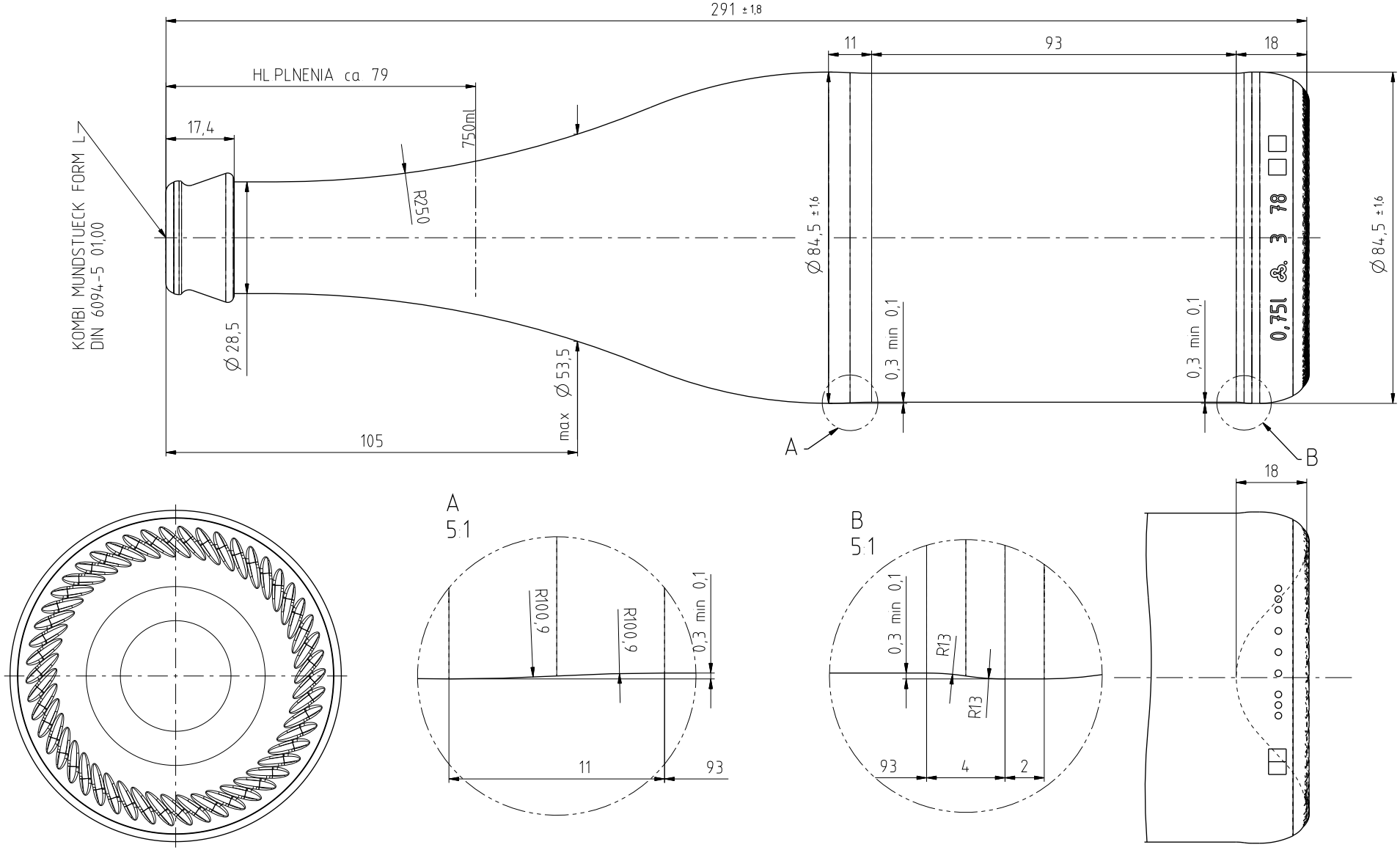

INDEX	ZMENY / modifications	DAT	MENO

SUHLAS TECHNOLOGA PT approved	DAT	VIS
SUH VYRTYMU FtB released VPN	06 02 13	Far
VYRZAVOD	DAT	VIS
VYRZAVOD	DAT	VIS

NETOLEROVANE ROZMERY PODLA DIN 6129

dimensions without tolerances conform to standard DIN 6129

TEPLOTA PLNENIA Filling temperature	≤ 8 °C
TEPLOTA SPRACOVANIA Conditioning temperature	≤ °C
OBSAH CO_2 CO_2 content	≤ 10 g/l
OBSAH ALKOHOLU Alcohol content	≤ Vol%
AXIALNE ZATAZENIE Axial pressure	daN
POUZITIE Disposal	MW / AW / EW X
PROCES Process	BB X / PB / EPB

NOMINAL OBJEM Capacity fillpoint	750 ml ± ml
TOTAL OBJEM Capacity brimful	780 ml ± 10 ml
HMOTNOST Approx glass weight	600 g
STREDNA HRUBKA STENY Average wall thickness	3,98 mm
PRIEMER POD USTIM Neck connection dia	28,5 mm
VNUTORNY PRIEMER KALIBRA Min through bore	17,1 mm
FARBA Color	VG GR WE

POZNAMKA Remarks	
ZAKAZNIK Customer	
PODOBNY AKO Similar to	4C006 0750 1215
NAHRADZUJE Replace No	
PONUKA CISLO Offer No	
MIERKA Scale	1:1 5:1
KRESLIL Des	Cem
DAT	06 02 13
DATA TYP Filetyp	AZ

vetropack

Vetropack Nemšová s r o
SK-91441 Nemšová
Tel 00421-032 6557 111
www vetropack com

VPN-0701-01-FOR-006-SK/EN

NAZOV VYROBKU Designation: Sekt 750 ml

VYROBOK CISLO Item No: 7C105 0750 1215

INDEX: A

Date: 15-Feb-13 Time: 12:38 Message: Vetropack to SAP released drawing: Original is archived at the designoffice